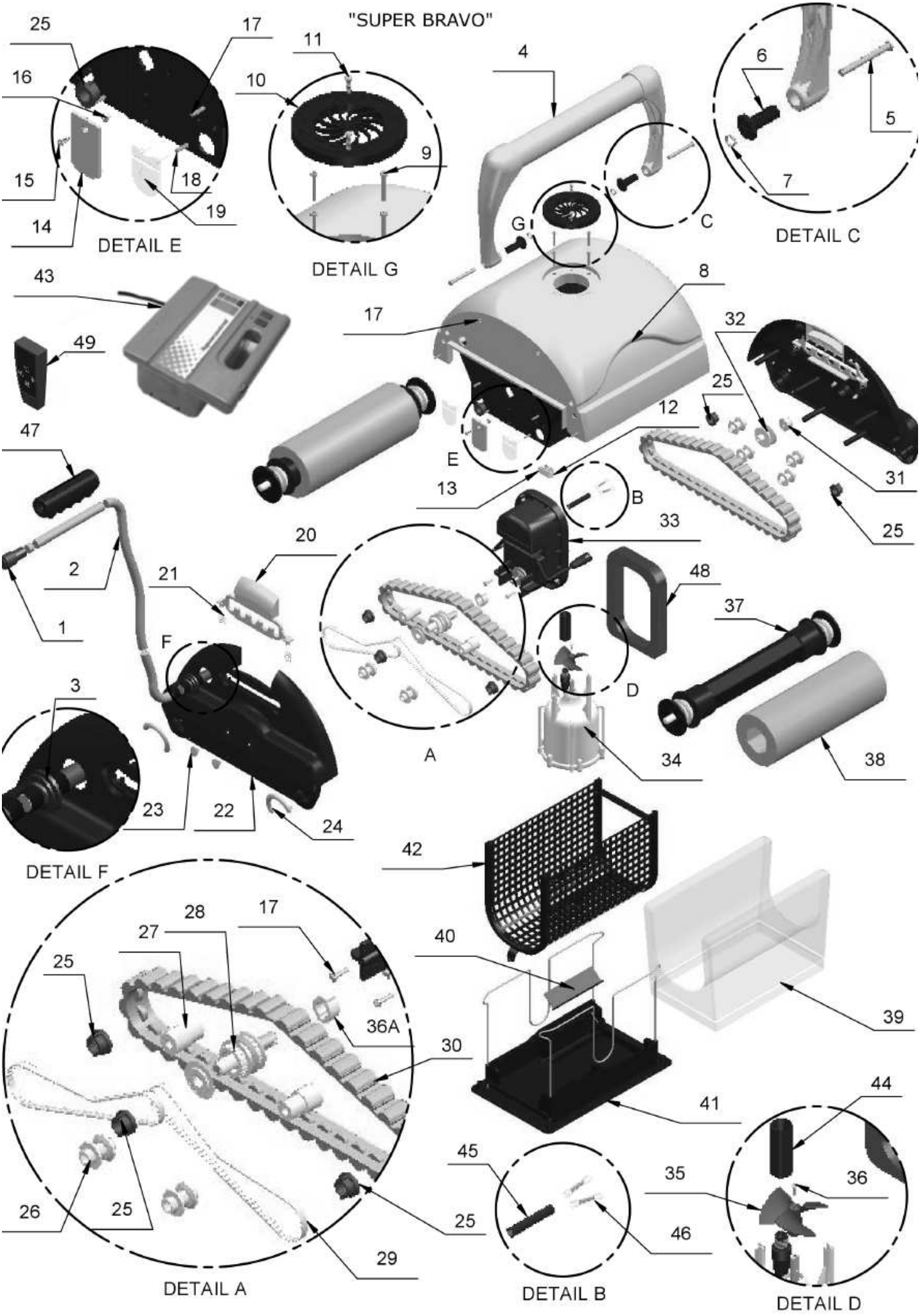
"SUPER BRAVO"
DETAIL E
DETAIL G
DETAIL C
DETAIL F
DETAIL A
DETAIL B
DETAIL D
A
B
C
D
E
F
G
1
2
3
4
5
6
7
8
9
10
11
12
13
14
15
16
17
18
19
20
21
22
23
24
25
26
27
28
29
30
31
32
33
34
35
36
36A
37
38
39
40
41
42
43
44
45
46
47
48
49